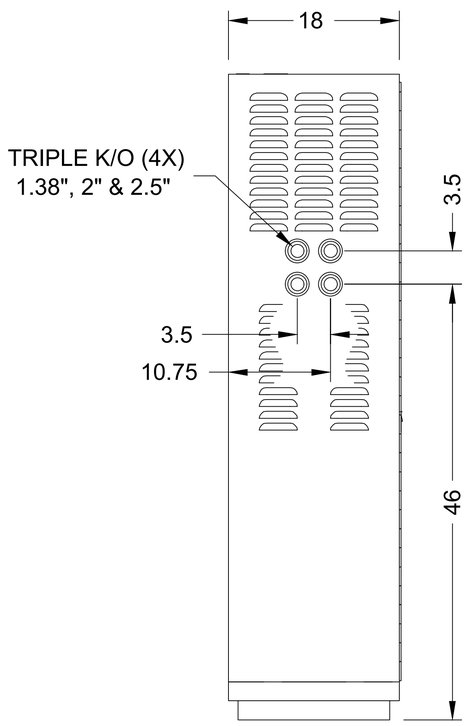

LEFT SIDE

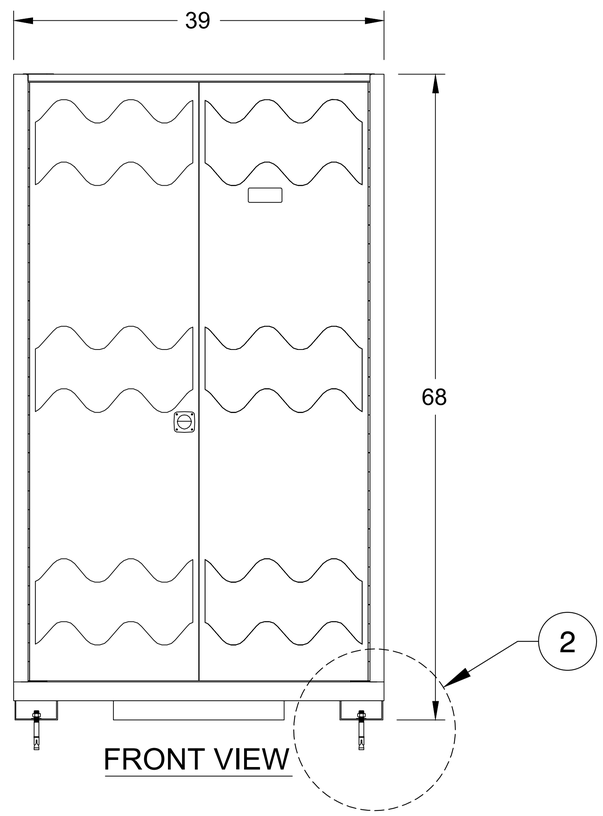

FRONT VIEW

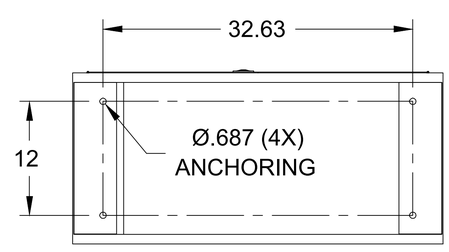

BOTTOM VIEW

CABINET ELEVATIONS

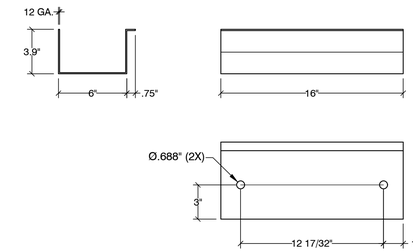

1 ANCHOR BRACKET DETAIL

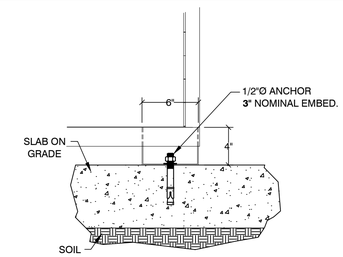

(4) ANCHORS REQ'D PER UNIT

2 ANCHOR DETAIL

NOTES:
1. DESIGNED PER THE 2021 IBC / 2022 CBC / 2023 LABC,
   Fa = 1.2 & Ss = 1.82
2. STORAGE CAPACITY: **2,150#** MAX. WEIGHT.
3. ANCHORS: HILTI KWIK BOLT TZ 2,
   ICC **#ESR-4266** W/ LABC SUPPLEMENT
4. CONCRETE: **5"** THICK x **2,500** PSI.
5. SOIL BEARING PRESSURE: **500** PSF. (MIN. REQ'D).
6. EVALUATION BASED ON NORTHRIDGE LOCATION
   (ONE OF THE HIGHEST LA FAULT AREAS)
   WITH THE FOLLOWING CALCULATION AS A TYPICAL EXAMPLE.
   (ASSUMED GROUND FLOOR INSTALLATION)

LOADS & DISTRIBUTION:

ANALYSIS BASED ON SECTION 13.3 OF THE ASCE 7-16 SPECIFICATION
REFERENCED IN CHAPTER 16 OF THE 2021 IBC/2022 CBC/2023 LABC

Fp (13.3-1)= 0.4 x ap x S_{DS} x Wp/ [Rp/ Ip]	0.234 x Wp	
Fp (13.3-2)= 1.6 x S_{DS} x Ip x Wp	2.336 x Wp	SHALL NOT BE GREATER THAN
Fp (13.3-3)= 0.3 x S_{DS} x Ip x Wp	0.438 x Wp	SHALL NOT BE LESS THAN

SITE CLASS = D
Fa = **1.2**
Ss = **1.82**
S_{DS} = 1.46
Ip = 1.00
Rp = 2.5 ASCE 7-16 Table 13.5-1
ap = 1 ASCE 7-16 Table 13.5-1

Wp = **2150 LB**

0.7Fp = 0.7*0.438*Wp
= 0.31*2150 LB
= 659 LB

OVERTURNING ANALYSIS:

CABINET HEIGHT, Ht = 68.0 IN
ANCHORS SPACING, D = 12.0 IN

Mot = Vtotal*(1/2 Ht)
= 659 LB * 68 IN * 1/2
= 22,412 IN-LB

Mst = Wp*D/2
= 2150 LB * 12 IN/2
= 12,900 IN-LB

Puplift = (Mot - 0.6*Mst)/D
= (22412 IN-LB - 0.6 * 12900 IN-LB)/12 IN
= 1223 LB <= UPLIFT

ANCHORS
ALLOWABLE CAPACITY PER ICC REPORT AND ACI 318-19 CHAPTER 17
PULLOUT : 1170 LB $T_{allowable, ASD}$
SHEAR : 2390 LB $V_{allowable, ASD}$

COMBINED STRESS = (1223 LB/2340 LB) + (659 LB/9560 LB)
= 0.59 < 1.2 OK

USE 1/2"Ø x 3"MIN. EMBED. HILTI KB-TZ2 (ICC ESR-4266) OR APPROVED EQUAL
(4) PER CABINET, (2) PER ANCHOR BRACKET

CALCULATIONS

ADDRESS:
POWER COMPANY
9301 TAMPA AVE
NORTHRIDGE, CA 91324

REV.	DATE	BY	DESCRIPTION

SEIZMIC
EST. 1985
SEIZMIC ENGINEERING, INC.
1130 E. Cypress St.
Covina, California 91724
Tel.(909)869-0989

DRAWN BY:	M.V. / T.C.
DATE:	01/11/23
LAST REV. BY:	
REV. DATE:	
TYPE:	
SCALE:	N.T.S.
APRV'D BY:	SAL E. FATEEN

REGISTERED PROFESSIONAL ENGINEER
SAL E. FATEEN
No. 25969
CIVIL
STATE OF CALIFORNIA
EXPIRES
12-31-2025

DESCRIPTION:
CABINET DETAILS

DRAWING NUMBER:
23-0067-A

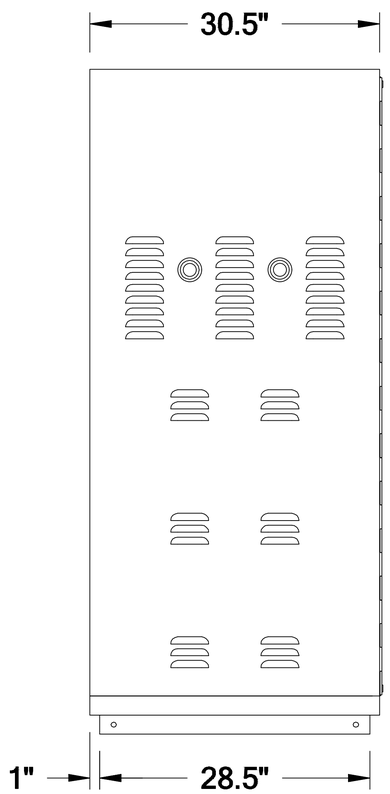

SIDE

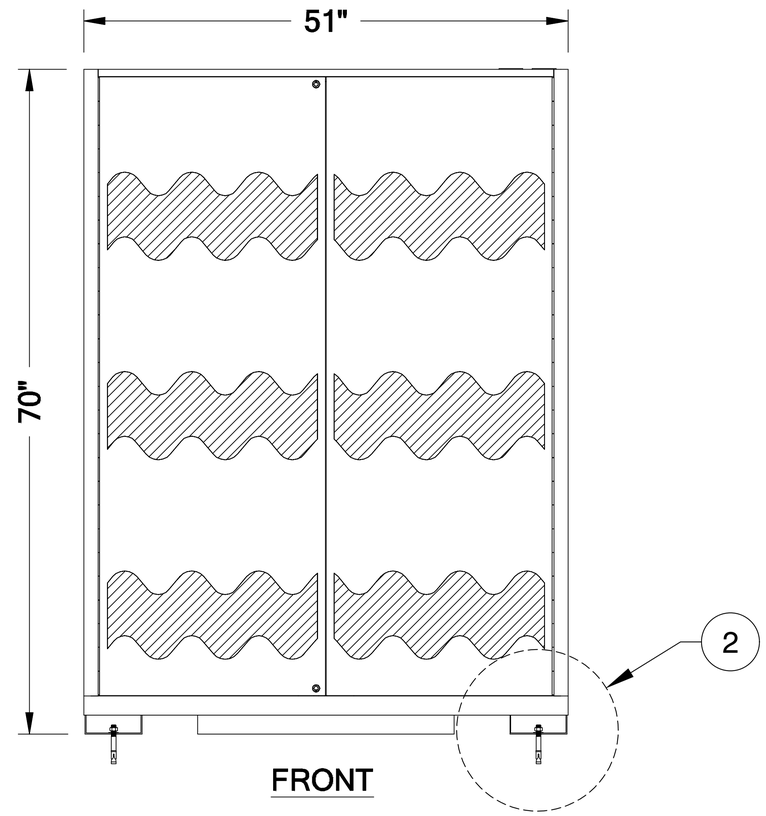

FRONT

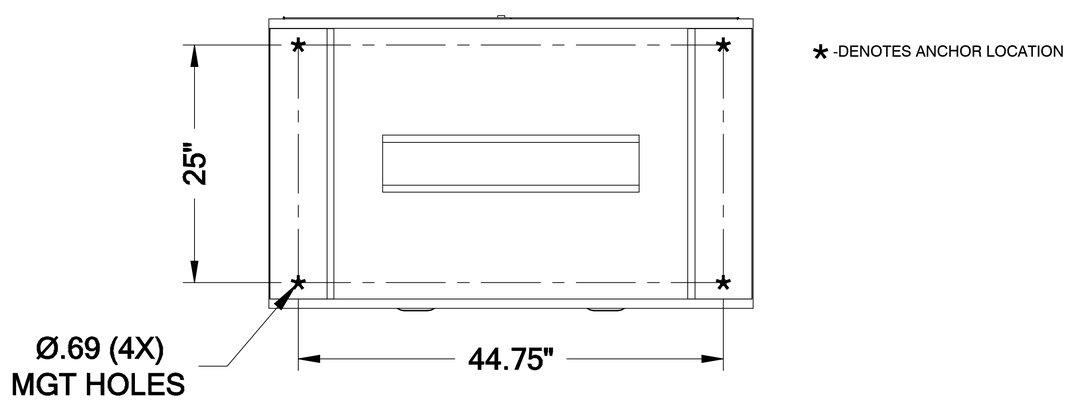

BOTTOM

CABINET ELEVATIONS

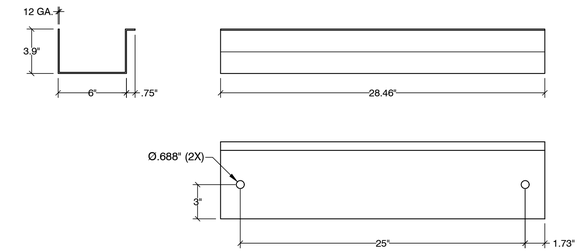

1 ANCHOR BRACKET DETAIL

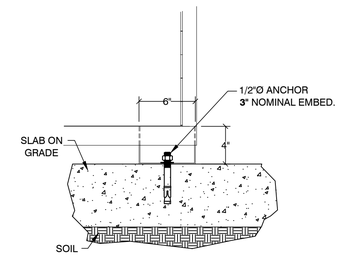

(4) ANCHORS REQ'D PER UNIT

2 ANCHOR DETAIL

NOTES:
1. DESIGNED PER THE 2021 IBC / 2022 CBC / 2023 LABC,
   Fa = 1.2 & Ss = 1.82
2. STORAGE CAPACITY: **4,640#** MAX. WEIGHT.
3. ANCHORS: HILTI KWIK BOLT TZ 2,
   ICC **#ESR-4266** W/ LABC SUPPLEMENT
4. CONCRETE: **5"** THICK x **2,500** PSI.
5. SOIL BEARING PRESSURE: **500** PSF. (MIN. REQ'D).
6. EVALUATION BASED ON NORTHRIDGE LOCATION
   (ONE OF THE HIGHEST LA FAULT AREAS)
   WITH THE FOLLOWING CALCULATION AS A TYPICAL EXAMPLE.
   (ASSUMED GROUND FLOOR INSTALLATION)

LOADS & DISTRIBUTION:

ANALYSIS BASED ON SECTION 13.3 OF THE ASCE 7-16 SPECIFICATION
REFERENCED IN CHAPTER 16 OF THE 2021 IBC/2022 CBC/2023 LABC

Fp (13.3-1)= 0.4 x ap x S_{DS} x Wp/ [Rp/ Ip]	0.234 x Wp	
Fp (13.3-2)= 1.6 x S_{DS} x Ip x Wp	2.336 x Wp	SHALL NOT BE GREATER THAN
Fp (13.3-3)= 0.3 x S_{DS} x Ip x Wp	0.438 x Wp	SHALL NOT BE LESS THAN

SITE CLASS = D
Fa = **1.2**
Ss = **1.82**
S_{DS} = 1.46
Ip = 1.00
Rp = 2.5 ASCE 7-16 Table 13.5-1
ap = 1 ASCE 7-16 Table 13.5-1

Wp = **4640 LB**

0.7Fp = 0.7*0.438*Wp
= 0.31*4640 LB
= 1,423 LB

OVERTURNING ANALYSIS:

CABINET HEIGHT, Ht = 70.0 IN
ANCHORS SPACING, D = 25.0 IN

Mot = Vtotal*(1/2 Ht)
= 1423 LB * 70 IN * 1/2
= 49,792 IN-LB

Mst = Wp*D/2
= 4640 LB * 25 IN/2
= 58,000 IN-LB

Puplift = (Mot - 0.6*Mst)/D
= (49792 IN-LB - 0.6 * 58000 IN-LB)/25 IN
= 600 LB <= UPLIFT

ANCHORS
ALLOWABLE CAPACITY PER ICC REPORT AND ACI 318-19 CHAPTER 17
PULLOUT : 1170 LB $T_{allowable, ASD}$
SHEAR : 2390 LB $V_{allowable, ASD}$

COMBINED STRESS = (600 LB/2340 LB) + (1423 LB/9560 LB)
= 0.41 < 1.2 OK

USE 1/2"Ø x 3"MIN. EMBED. HILTI KB-TZ2 (ICC ESR-4266) OR APPROVED EQUAL
(4) PER CABINET

CALCULATIONS

ADDRESS:
POWER COMPANY
9301 TAMPA AVE
NORTHRIDGE, CA 91324

REV.	DATE	BY	DESCRIPTION

SEIZMIC
EST. 1985
SEIZMIC ENGINEERING, INC.
1130 E. Cypress St.
Covina, California
91724
Tel.(909)869-0989

DRAWN BY:	M.V. / T.C.
DATE:	01/11/23
LAST REV. BY:	
REV. DATE:	
TYPE:	
SCALE:	N.T.S.
APRV'D BY:	SAL E. FATEEN

REGISTERED PROFESSIONAL ENGINEER
SAL E. FATEEN
No. 25069
CIVIL
STATE OF CALIFORNIA
EXPIRES
12-31-2025

DESCRIPTION:
CABINET DETAILS

DRAWING NUMBER:
23-0067-B

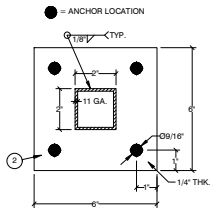

2 BASE PLATE

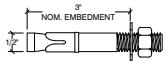

(4) REQ'D PER BASE PLATE (2)

(2) REQ'D PER SEISMIC BRACKET (11)

3 ANCHOR

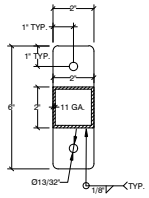

4 BRACE

6A CHANNEL

5 SQ. TUBE

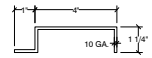

6C CHANNEL

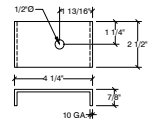

6B CHANNEL

NOTES:
1. DESIGNED PER THE 2021 IBC / 2022 CBC / 2023 LABC,
   Fa = 1.2 & Ss = 1.82
2. STORAGE CAPACITY: **410#** PER LEVEL
3. ANCHORS: HILTI KWIK BOLT TZ 2,
   ICC **#ESR-4266** W/ LABC SUPPLEMENT
4. CONCRETE: **5"** THICK **x 2,500** PSI.
5. SOIL BEARING PRESSURE: **500** PSF. (MIN. REQ'D).
6. EVALUATION BASED ON NORTHRIDGE LOCATION
   (ONE OF THE HIGHEST LA FAULT AREAS)
   WITH THE FOLLOWING CALCULATION AS A TYPICAL EXAMPLE.
   (ASSUMED GROUND FLOOR INSTALLATION)

1 COLUMN

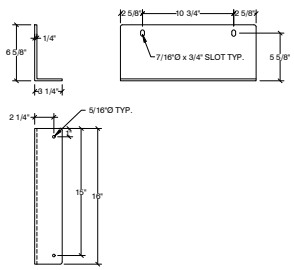

7 SEISMIC BRACKET (UPPER UNIT)

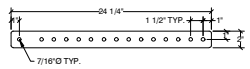

9 EXTENSION BRACKET

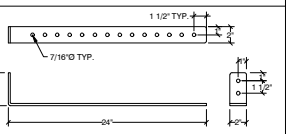

8 WALL MOUNTED BRACKET

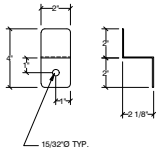

10 BRACKET

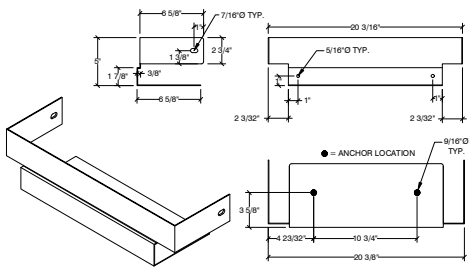

11 SEISMIC BRACKET (LOWER UNIT)

LOADS & DISTRIBUTION: CABINET

ANALYSIS BASED ON SECTION 13.3 OF THE ASCE 7-16 SPECIFICATION
REFERENCED IN CHAPTER 16 OF THE 2021 IBC/2022 CBC/2023 LABC

Fp (13.3-1)= 0.4 x ap x S_{DS} x Wp/ [Rp/ Ip]	0.234 x Wp	
Fp (13.3-2)= 1.6 x S_{DS} x Ip x Wp	2.336 x Wp	SHALL NOT BE GREATER THAN
Fp (13.3-3)= 0.3 x S_{DS} x Ip x Wp	0.438 x Wp	SHALL NOT BE LESS THAN

SITE CLASS = D
Fa = **1.2**
Ss = **1.83**
S_{DS} = 1.46
Ip = 1.00
Rp = 2.5 ASCE 7-16 Table 13.5-1
ap = 1 ASCE 7-16 Table 13.5-1
wDL = 20 LB PER LEVEL
wLL = 410 LB PER LEVEL

Wp = wDL + wLL

0.7Fp = 0.7 x 0.438 x Wp
= 0.31 x [20 + 410] LB
= 132 LB

SEISMIC DISTRIBUTION:

LEVEL	h IN	WEIGHT LB	HEIGHT IN	Fi LB	Mot IN-LB
1	3.0	430	3.0	1.32	396
2	17.0	430	20.0	1.32	2637
3	17.0	430	37.0	1.32	4878
4	17.0	430	54.0	1.32	7119
5	17.0	430	71.0	1.32	9360
Σ =	71 IN	2150 LB		659 LB	24,390 IN-LB

OVERTURNING ANALYSIS: CABINET

ANCHORS SPACING, D = 14 IN
TOP LEVEL HEIGHT = 71 IN

FULLY LOADED:
Total Shear= 659 LB
Mot = Σ(Fi*hi)
= 24,390 IN-LB
Mst = Σ(wDL + wLL)*D/2
= (80 LB + 1640 LB)*14 IN/2
= 12,040 IN-LB
Puplift = (Mot - 0.6*Mst)/D
= (24390 - 0.6*12040)/14
= 1226 LB <= UPLIFT

TOP SHELF LOADED ONLY:
Shear = 132 LB
Mot = Vtop * ht
= 132 LB * 71 IN
= 9,360 IN-LB
Mst = Σ(wDL + wLL)*D/2
= (80 LB + 410 LB)*14 IN/2
= 3,430 IN-LB
Puplift = (Mot - 0.6*Mst)/D
= (9360 - 0.6*3430)/14
= 522 LB <= UPLIFT

ANCHORS
ALLOWABLE CAPACITY PER ICC REPORT AND ACI 318-14 CHAPTER 17
PULLOUT : 1170 LB $T_{allowable,\ ASC}$
SHEAR : 2390 LB $V_{allowable,\ ASC}$

COMBINED STRESS1 = (1226 LB/2340 LB) + (659 LB/9560 LB)
= 0.59 < 1.2 OK

COMBINED STRESS2 = (522 LB/2340 LB) + (132 LB/9560 LB)
= 0.24 < 1.2 OK

USE 1/2"Ø x 3" MIN. EMBED. HILTI KB-TZ2 (ICC ESR-4266) OR APPROVED EQUAL
(4) PER BATTERY CABINET
(4) PER BASE PLATE ON STACKED UNITS

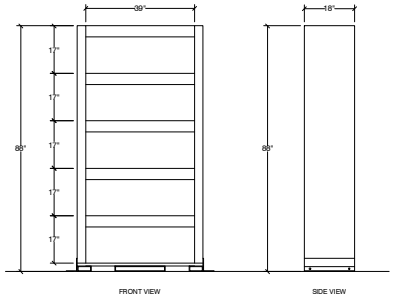

**NOTE: ANALSIS ON 88" TALL MOST CRITICAL

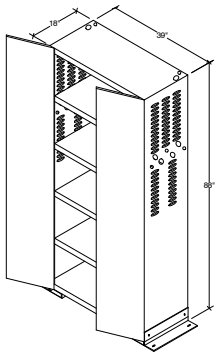

CABINET ELEVATIONS

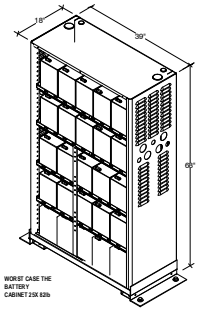

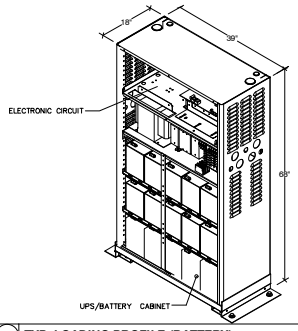

TYP. LOADING PROFILE (BATTERY)

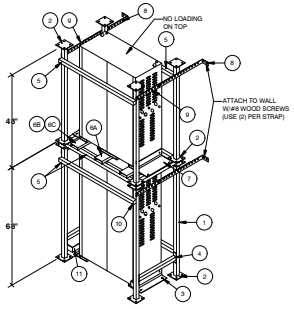

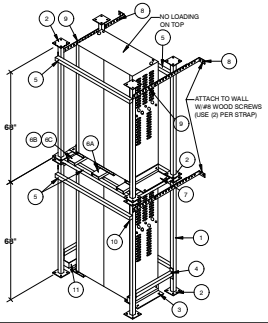

CABINET ELEVATIONS (STACKED UNITS)

CALCULATIONS

ADDRESS:
POWER COMPANY
SOUTH MAIN
NORTHRIDGE, CA 91324

REV.	DATE	BY	DESCRIPTION

SEIZMIC
EST. 1985
SEIZMIC ENGINEERING, INC.
1130 E. Cypress St.
Covina, California 91724
Tel.(909)869-0989

DRAWN BY:	M.V. / T.C.
DATE:	01/25/24
LAST REV. BY:	
REV. DATE:	
TYPE:	
SCALE:	N.T.S.
APRV'D BY:	SAL E. FATEEN

Digitally signed by Sal Fateen
Date: 2024.03.05 16:20:39-08'00'

REGISTERED PROFESSIONAL ENGINEER
SAL E. FATEEN
No. 25969
CIVIL
STATE OF CALIFORNIA
EXPIRES
12-31-2025

DESCRIPTION:
CABINET DETAILS

DRAWING NUMBER:
24-0186-A

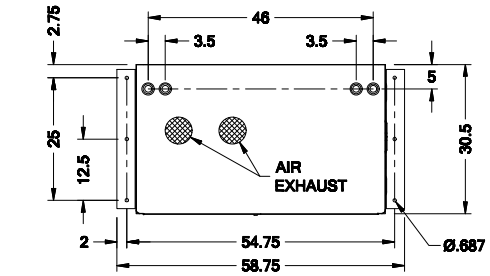

TOP VIEW

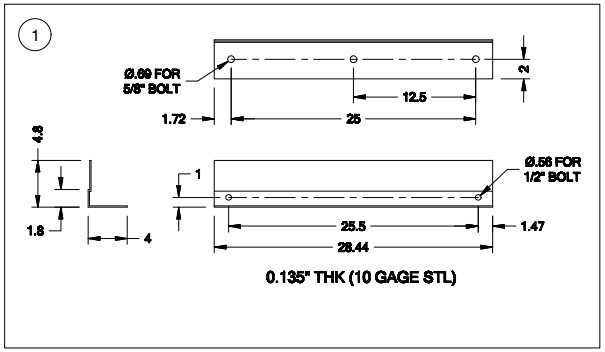

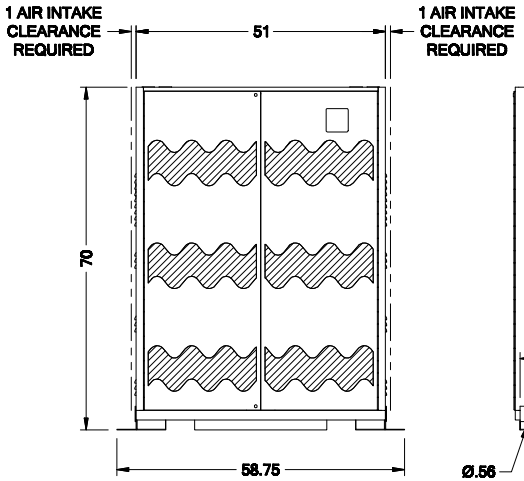

FRONT VIEW

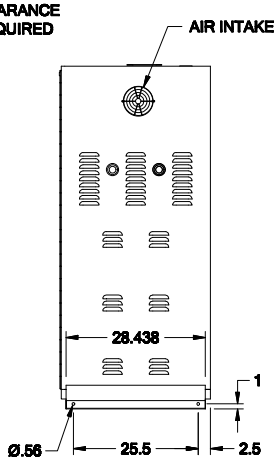

SIDE VIEW

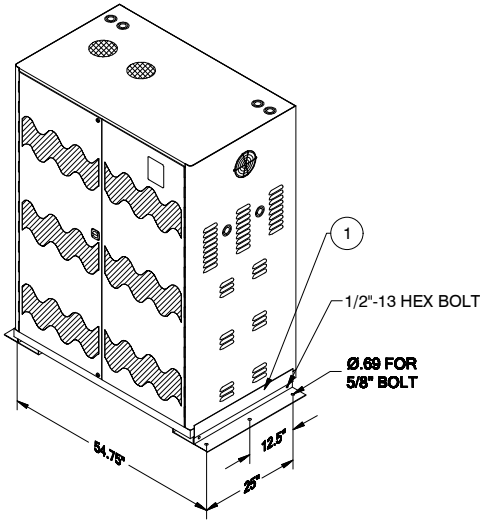

CABINET ELEVATIONS

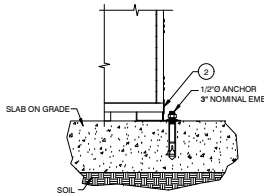

(3) ANCHORS REQ'D PER ANCHOR BRACKET

(6) ANCHORS REQ'D PER UNIT

2 ANCHOR DETAIL

NOTES:

1. DESIGNED PER THE 2021 IBC / 2022 CBC / 2023 LABC, Fa = 1.2 & Ss = 1.82
2. STORAGE CAPACITY: **4,640#** MAX. WEIGHT.
3. ANCHORS: HILTI KWIK BOLT TZ 2, ICC **#ESR-4266** W/ LABC SUPPLEMENT
4. CONCRETE: **6"** THICK x **2,500** PSI.
5. SOIL BEARING PRESSURE: **500** PSF. (MIN. REQ'D).
6. EVALUATION BASED ON NORTHRIDGE LOCATION (ONE OF THE HIGHEST LA FAULT AREAS) WITH THE FOLLOWING CALCULATION AS A TYPICAL EXAMPLE. (ASSUMED GROUND FLOOR INSTALLATION)

LOADS & DISTRIBUTION: CABINET

ANALYSIS BASED ON SECTION 13.3 OF THE ASCE 7-16 SPECIFICATION
REFERENCED IN CHAPTER 16 OF THE 2021 IBC/2022 CBC/2023 LABC

F_p (13.3-1)= 0.4 x ap x S_{DS} x Wp/ (Rp/ Ip)	0.234 x Wp	
F_p (13.3-2)= 1.6 x S_{DS} x Ip x Wp	2.336 x Wp	SHALL NOT BE GREATER THAN
F_p (13.3-3)= 0.3 x S_{DS} x Ip x Wp	0.438 x Wp	SHALL NOT BE LESS THAN

SITE CLASS = D
Fa = **1.2**
Ss = **1.83**
S_{DS} = 1.46
Ip = 1.00
Rp = 2.5 ASCE 7-16 Table 13.5-1
ap = 1 ASCE 7-16 Table 13.5-1

Wp = **4640 LB**

0.7Fp = 0.7*0.438*Wp
= 0.31*4640 LB
= 1,423 LB

OVERTURNING ANALYSIS:

CABINET HEIGHT, Ht = 70.0 IN
ANCHORS SPACING, D = 25.0 IN

Mot = Vtotal*(1/2 Ht)
= 1423 LB * 70 IN * 1/2
= 49,792 IN-LB

Mst = Wp*D/2
= 4640 LB * 25 IN/2
= 58,000 IN-LB

Puplift = (Mot - 0.6*Mst)/D
= (49792 IN-LB - 0.6 * 58000 IN-LB)/25 IN
= 600 LB <= UPLIFT

ANCHORS
ALLOWABLE CAPACITY PER ICC REPORT AND ACI 318-14 CHAPTER 17
PULLOUT : 1170 LB $T_{allowable, ASD}$
SHEAR : 2390 LB $V_{allowable, ASD}$

COMBINED STRESS = (600 LB/3510 LB) + (1423 LB/14340 LB)
= 0.27 < 1.2 OK

USE 1/2"Ø x 3"MIN. EMBED. HILTI KB-TZ2 (ICC ESR-4266) OR APPROVED EQUAL
(6) PER CABINET

CALCULATIONS

ADDRESS:
POWER COMPANY
SWITCHGEAR
NORTHRIDGE, CA 91324

REV.	DATE	BY	DESCRIPTION

SEIZMIC
EST. 1985
SEIZMIC ENGINEERING, INC.
1130 E. Cypress St.
Covina, California 91724
Tel.(909)869-0989

DRAWN BY:	M.V. / T.C.
DATE:	01/25/24
LAST REV. BY:	
REV. DATE:	
TYPE:	
SCALE:	N.T.S.
APR'D BY:	SAL E. FATEEN

REGISTERED PROFESSIONAL ENGINEER
SAL E. FATEEN
No. 25969
CIVIL
STATE OF CALIFORNIA
EXPIRES
12-31-2025

DESCRIPTION:
CABINET DETAILS

DRAWING NUMBER:
24-0186-B